NEW TO MARKET*

Brake Discs for Nissan Juke

NISSHINBO

PART-NO.: ND2077K

Make	Model	Type	Year	Axle
NISSAN	JUKE (F16_)	1.0	08/19	rear

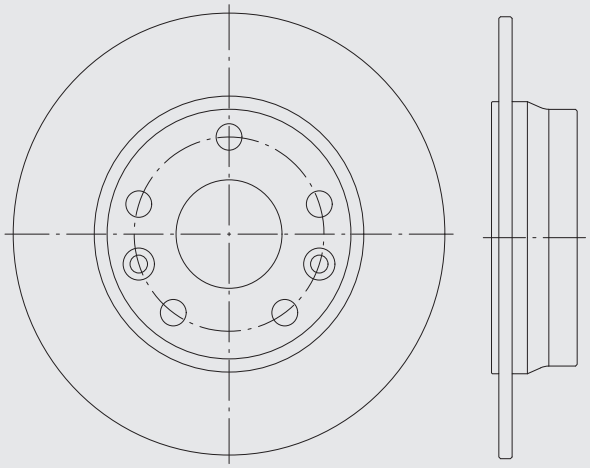

At TMD Friction we are proud of our ability to deliver premium O.E. braking solutions to the global aftermarket, proving our credentials as industry leaders for friction products. As part of the Nisshinbo group – the largest original friction supplier to Asian vehicles – we provide our customers with an unrivalled range of O.E. brake friction for Asian vehicles with the Nisshinbo brand.

For further product information please visit:

brakebook.com

Download on the App Store

GET IT ON Google Play

Nisshinbo is a registered trademark of TMD Friction

www.nisshinbo-brakes.com